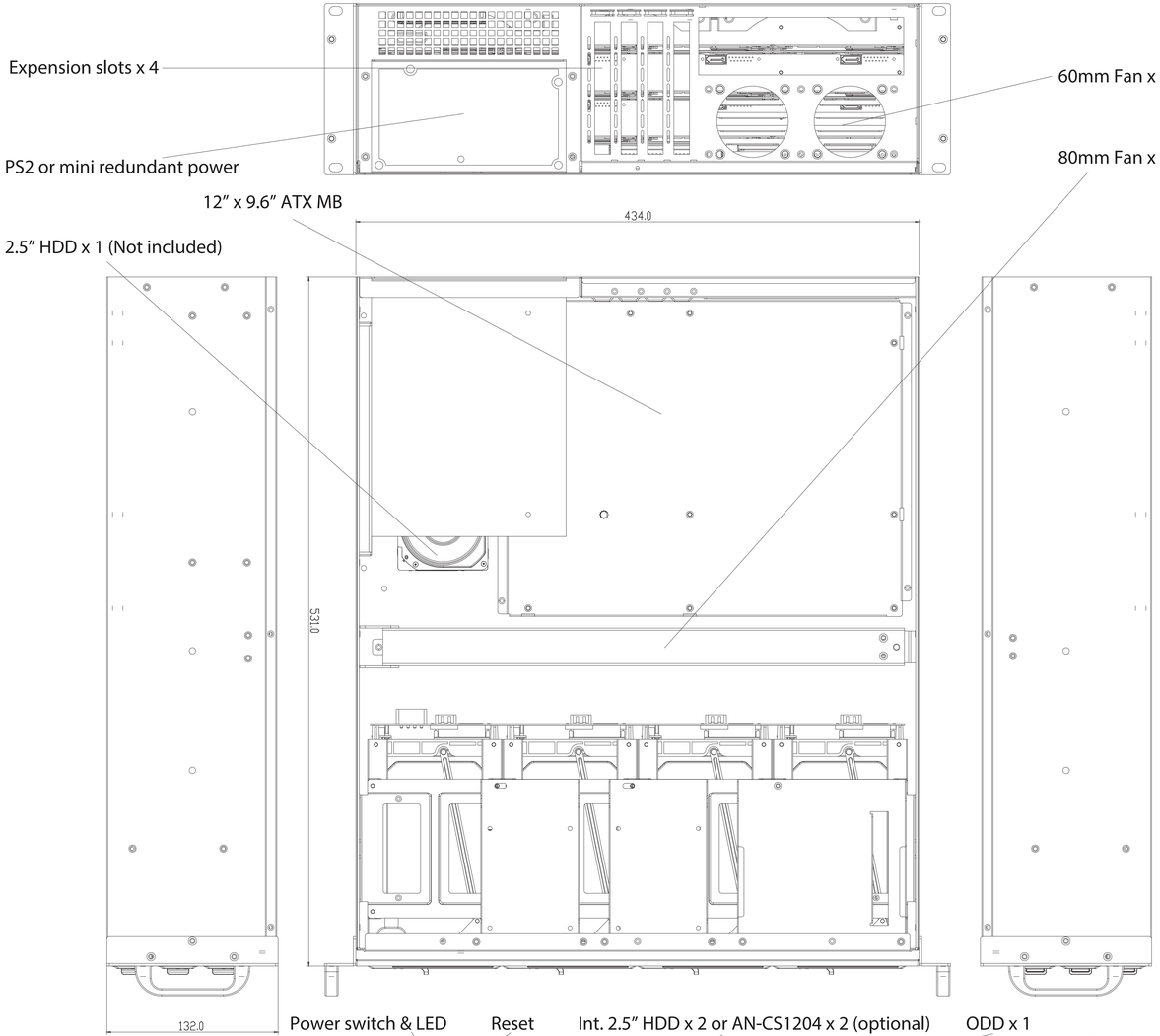

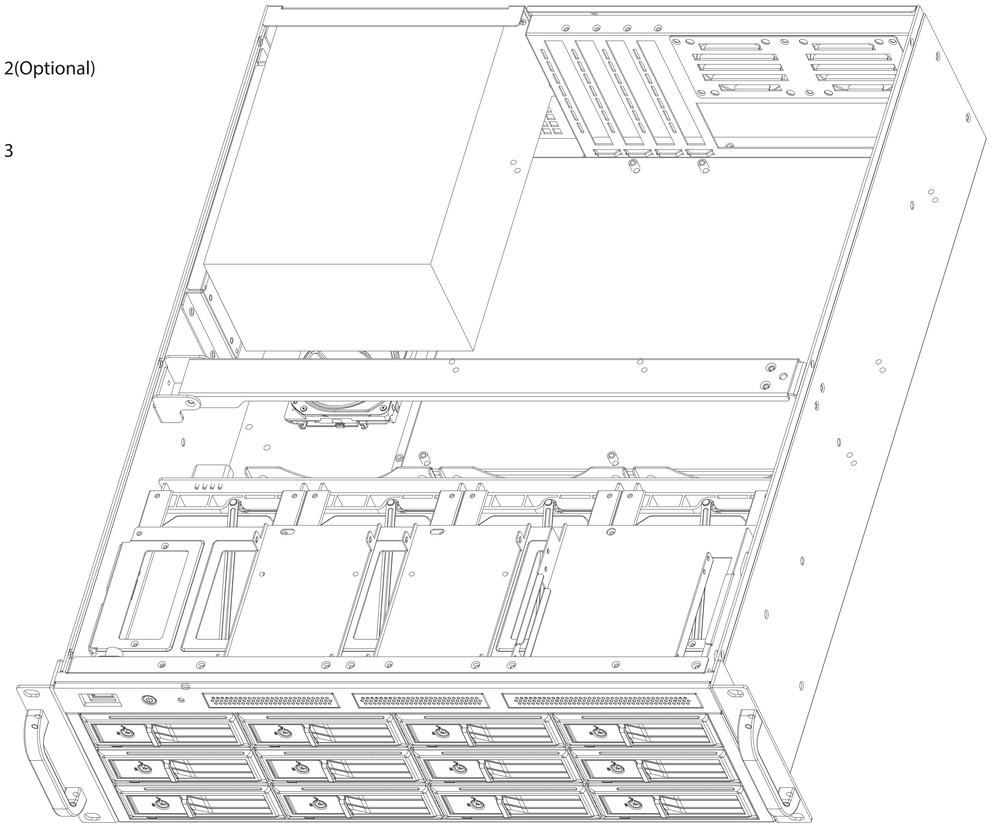

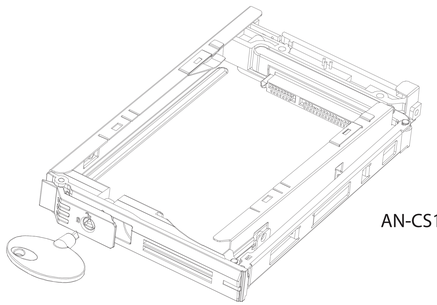

iSG INDUSTRIAL

Model NO	M-3120-ATX
Ext	3.5"x12, ODDx1
Ext	2.5"x2 (optional)
Hid	2.5"x1, 2.5"x2
(or AN-CS1204 x 2 as options)	
M/B	12"x9.6"
Fan	8.0CMx3 6.0CMx2 (optional)
Slot	4